smart box

Drawer Systems

2021.03

KNAPE & VOGT

POWERED BY samet

Smooth and Silent Movement

The state-of-the-art technology used in SMART BOX Drawer Systems adds elegance to opening and closing drawer features. Perfection of its technology ensures silent and smooth motion.

Due to the synchronization system used in SMART BOX drawers, the drawers will move smoothly and insilence.

Full Extension Soft Close with Adaptive Damping

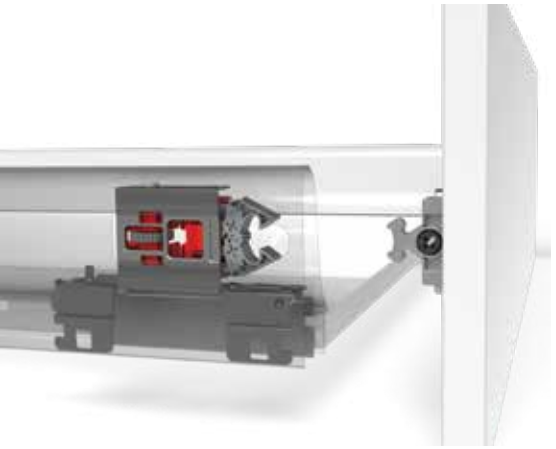

Safe Locking Mechanism and Adjustment Options

A locking mechanism in a drawer is required to improve safety of drawer systems. With the help of this new generation locking mechanism in SMART BOX, along with the aesthetical look and easy utilization design can now be created with high level of safety. SMART BOX upgraded adjustment mechanism, with high tolerance level, was designed in consideration of both, user's and producer's convenience. It offers easy and accurate installation during specially designed furniture production.

- Improved soft closing system guarantees smooth running
- Dynamic load capacity: 88 lb (40 kg)
- ±0 5/64”(± 2 mm) vertical and ±0 1/16”(± 1,5 mm) horizontal adjustment.
- Finish: White and Grey
- 100 mm (3-15/16”) Drawer System Height
- Wooden backboard thickness options: 5/8” (16 mm)
- Drawer Length for 88 lb (40 kg): 13-25/32“, 17-23/32”, 19-11/16”, 21-21/32”, 23-5/8”, 25-19/32” (350/450/500/550/600/650 mm)
- Smart-Click: Tool free assembly and removal of front panel.
- Smart-Fit: Simple and tool free assembly, as well as removal of drawer.
- The improved stability guarantees a long product durability.

smart box | ASSEMBLY INSTRUCTIONS

1

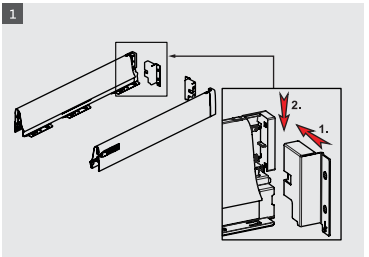

2

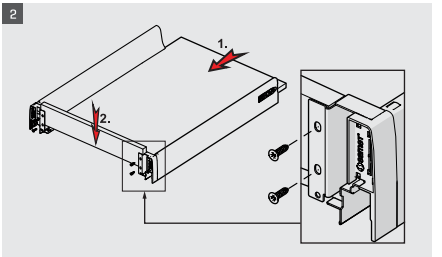

3

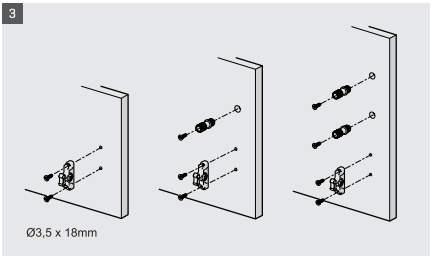

4

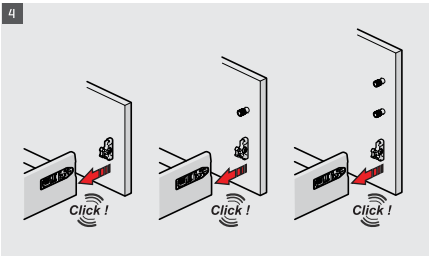

5

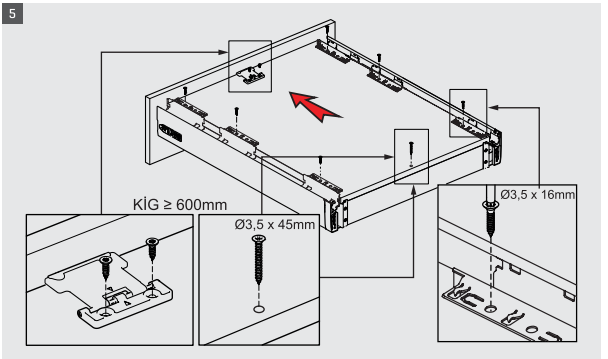

6

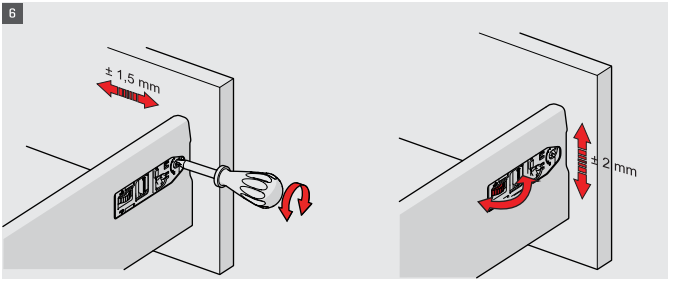

7

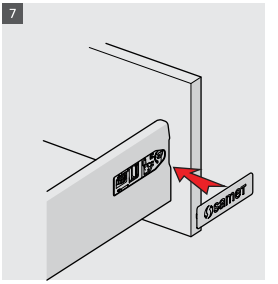

smart box | ASSEMBLY INSTRUCTIONS

1

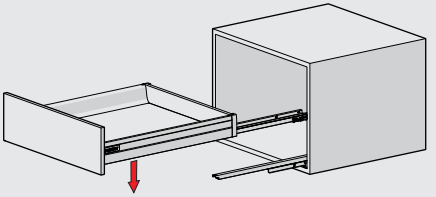

2

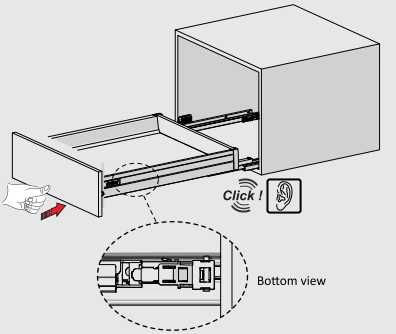

3

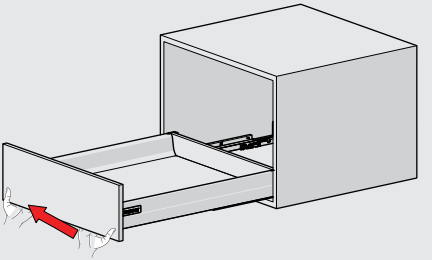

4

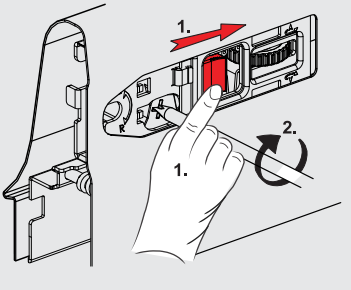

5

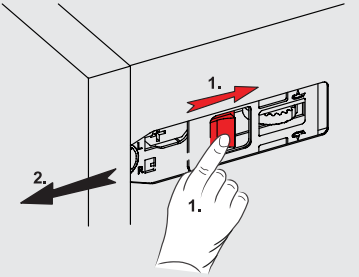

smart box | DRAWER SYSTEM MANUAL

MAIN PACKAGE COMPONENTS

SLIDES

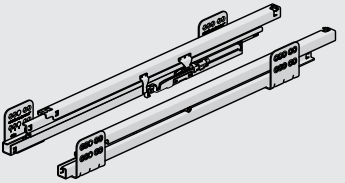

SIDE PANEL

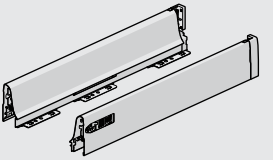

BACKBOARD HOLDER

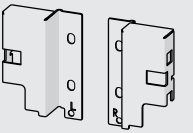

FRONT CONNECTING PIECES

DECORATIVE COVER

SCREW (RECOMMENDED)

CABINET DIMENSIONS

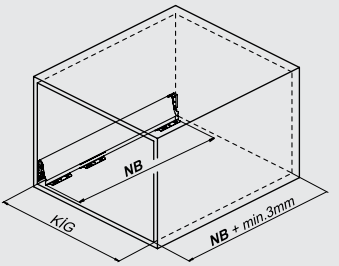

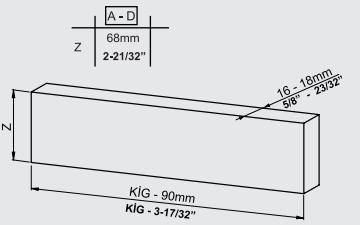

*KIG: Cabinet Internal Width

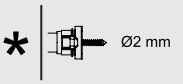

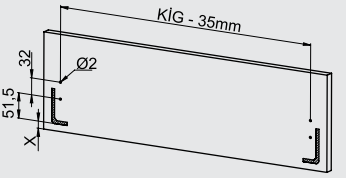

WOODEN BACKBOARD APPLICATION

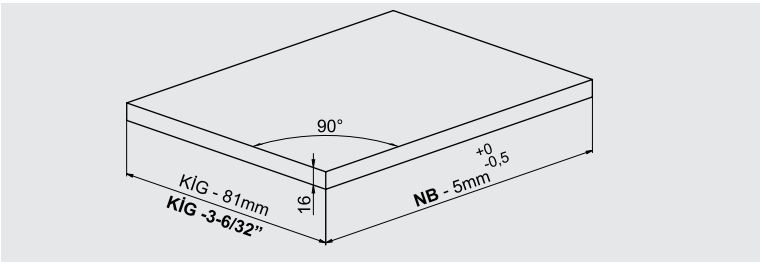

DRAWER FRONT STABILIZER

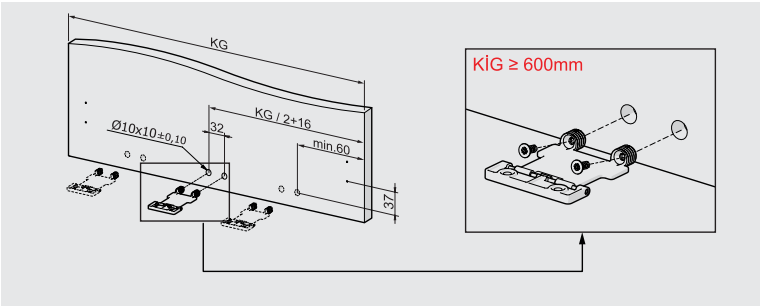

SCREW LOCATION FOR THE SLIDES

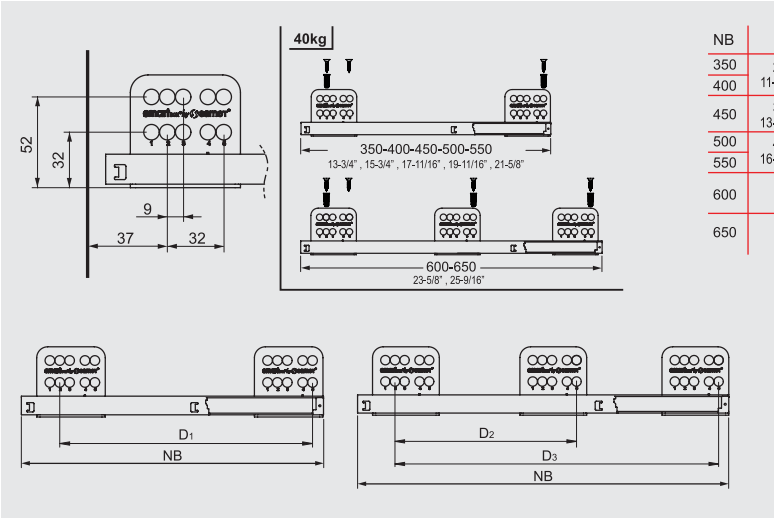

NB	D1	D2	D3
350	288 11-10/32"	–	–
400			
450	352 13-27/32"	–	–
500	416 16-12/32"	–	–
550			
600	–	288 11-10/32"	480 11-14/16"
650	–	320 12-19/32"	512 20-5/32"

smart box | ITEM LIST

RETAIL PACKAGE

PRODUCT ITEM	DESCRIPTION	PACKAGE	QUANTITY
KVSDBB 5901 GR	Smartbox 88 LB 16 350mm Grey	Retail	1 Set
KVSDBB 5900 WH	Smartbox 88 LB 16 350mm White	Retail	1 Set
KVSDBB 5903 GR	Smartbox 88 LB 16 400mm Grey	Retail	1 Set
KVSDBB 5902 WH	Smartbox 88 LB 16 400mm White	Retail	1 Set
KVSDBB 5905 GR	Smartbox 88 LB 16 450mm Grey	Retail	1 Set
KVSDBB 5904 WH	Smartbox 88 LB 16 450mm White	Retail	1 Set
KVSDBB 5907 GR	Smartbox 88 LB 16 500mm Grey	Retail	1 Set
KVSDBB 5906 WH	Smartbox 88 LB 16 500mm White	Retail	1 Set
KVSDBB 5909 GR	Smartbox 88 LB 16 550mm Grey	Retail	1 Set
KVSDBB 5908 WH	Smartbox 88 LB 16 550mm White	Retail	1 Set
KVSDBB 5911 GR	Smartbox 88 LB 16 600mm Grey	Retail	1 Set
KVSDBB 5910 WH	Smartbox 88 LB 16 600mm White	Retail	1 Set
KVSDBB 5913 GR	Smartbox 88 LB 16 650mm Grey	Retail	1 Set
KVSDBB 5912 WH	Smartbox 88 LB 16 650mm White	Retail	1 Set

COMPLEMENTARY

PRODUCT ITEM	DESCRIPTION	PACKAGE	QUANTITY
KVSDBB 5100	Drawer Box Systems Drawer Front Stabilizer	Wholesale	250 pcs

smart box | UPGRADES

GALLERY RAILING

PRODUCT CODE	DESCRIPTION	PACKAGE	QUANTITY
KVSDBB 5800 WH	Smartbox Gallery Railing 450mm White	Wholesale	20 Set
KVSDBB 5801 GR	Smartbox Gallery Railing 450mm Grey	Wholesale	20 Set
KVSDBB 5802 WH	Smartbox Gallery Railing 500mm White	Wholesale	20 Set
KVSDBB 5803 GR	Smartbox Gallery Railing 500mm Grey	Wholesale	20 Set
KVSDBB 5804 WH	Smartbox Gallery Railing 550mm White	Wholesale	20 Set
KVSDBB 5805 GR	Smartbox Gallery Railing 550mm Grey	Wholesale	20 Set
KVSDBB 5700 WH	Smartbox Drawer Back Holder (LH/RH) 16mm Single Gallery Railing White	Wholesale	4 Set
KVSDBB 5701 GR	Smartbox Drawer Back Holder (LH/RH) 16mm Single Railing Grey	Wholesale	4 Set
KVSDBB 5702 WH	Smartbox Drawer Back Holder (LH/RH) 16mm Double Gallery Railing White	Wholesale	4 Set
KVSDBB 5703 GR	Smartbox Drawer Back Holder (LH/RH) 16mm Double Railing Grey	Wholesale	4 Set

TOOLS

PRODUCT CODE	DESCRIPTION
KVSDBB 1001	Smartbox Drawer Front Marking Template

Knape & Vogt reserves the right to change product specifications at any time without notice.
KV and the KV logo are trademarks of Knape & Vogt Manufacturing Company.
©2021 Knape & Vogt Manufacturing Company.

01.3225 | 25.03.2021

KNAPE & VOGT®

POWERED BY SAMET™

www.kv.com

Search Knape and Vogt on
your favorite social media sites